Double pulley drive RK, RKN

RK, RKN $P_{1\,max.}$ = 150 kW

Asymmetrical drive units RK, RKN for 4–150 kW motor ratings, comprising:
- mechanically adjustable regulating pulley R with integral central adjustment
  - a) output pulley K with automatic torque-dependent pressure device
  - b) type KN with increased pulley diameter for lower output speeds

This driving system is characterized by high efficiency even with partial load operation.
This driving system is suitable for high starting torques and provides a high degree of overload safety.

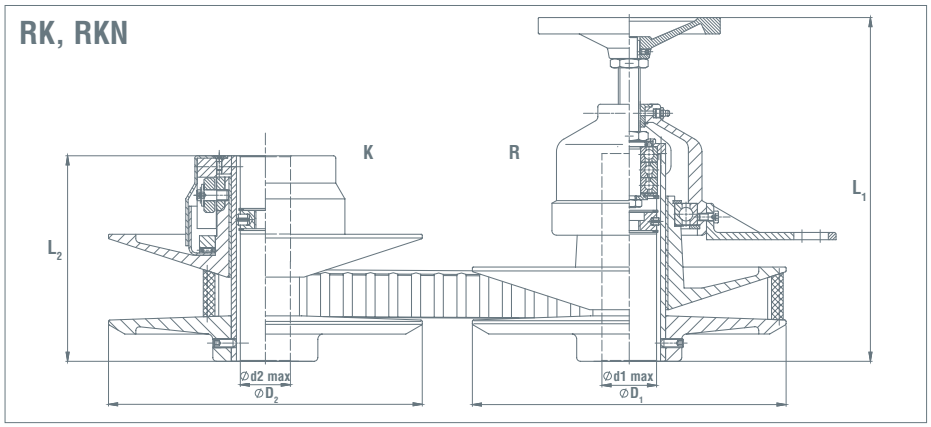

Double pulley drive RK, RKN:

Type	Speed-range max.	Motor n_1 in 1/min	Motor P_{1max} in kW	$n_2$max 1/min	$n_2$min 1/min	P_2max kW	P_2min kW	D1 mm	L1 mm	D2 mm	L2 mm	d1 max. mm	d2 max. mm	Wide V-belt mm
RK3	8,0	1470	4,0	4080	520	3,6	1,5	210	230	210	122	38	28	30
RK3	6,0	1470	5,5	3600	590	5,00	2,0	210	230	210	122	38	28	30
RKN34	5,0	1470	5,5	2420	470	5,0	1,7	210	230	245	137	38	38	30
RK4	8,0	1470	7,5	4080	520	6,8	2,2	245	280	245	146	42	38	36
RK4	5,0	1470	11,0	3220	660	9,9	3,3	245	280	245	146	42	38	36
RKN45	6,0	1470	11,0	2610	450	9,9	3,3	245	280	285	171	42	45	36
RK5	8,0	1470	11,0	4080	520	9,9	4,2	285	314	285	183	48	48	42
RK5	5,0	1470	15,0	3240	640	13,5	6,8	285	314	285	183	48	48	42
RKN56	5,4	1470	18,5	2380	445	16,7	4,4	285	314	345	210	48	60	42
RK6	8,0	1470	22,0	4100	520	20,0	7,4	345	379	345	226	60	60	52
RK6	4,0	1470	30,0	2880	740	27,0	15,2	345	379	345	226	60	60	52
RKN67	5,5	1470	30,0	2350	430	27,0	8,4	345	379	415	251	60	60	52
RKN67	5,0	1470	37,0	2250	460	33,5	9,9	345	379	415	251	60	60	52
RKN68	5,2	1470	37,0	2020	390	33,5	8,1	345	379	450	315	60	75	52
RK7	6,0	1470	37,0	3540	600	33,5	19,2	415	395	415	260	65	60	57
RK7	5,0	1470	45,0	3240	650	40,5	23,0	415	395	415	260	65	60	57
RK7	2,0	1470	55,0	2040	1040	49,5	47,0	415	395	415	260	65	60	57
RKN78	5,2	1470	45,0	2900	560	40,5	19,2	415	395	450	323	65	75	57
RKN78	4,0	1470	55,0	2520	640	49,5	25,0	415	395	450	323	65	75	57
RK8	5,0	1470	55,0	3220	660	49,5	24,5	450	460	450	345	75	75	57
RK8	2,3	1470	75,0	2210	960	67,5	41,0	450	460	450	345	75	75	57
RKN89	4,0	1470	75,0	1940	500	67,5	28,0	450	460	560	380	75	85	57
RN9	3,0	1470	90,0	1870	650	81,0	40,0	560	570	560	380	85	85	66
RN9	2,5	1470	110,0	1740	710	100,0	50,0	560	570	560	380	85	85	66
RN9	2,0	1470	150,0	1820	890	135,0	75,0	560	570	560	380	85	85	66